NOTES

Academic Year: 2026-27

Course Code: BEE702

Course Title: Industrial Drives and Applications

Course Co-ordinator Name: Kavyashree S

Department of EEE
Emitting Elite Energy

DEPARTMENT OF ELECTRICAL & ELECTRONICS ENGINEERING

Vision of the Institute **Development of academically excellent, culturally vibrant, socially responsible and globally competent human resources.** **Mission of the Institute** • **To keep pace with advancements in knowledge and make the students competitive and capable at the global level.** • **To create an environment for the students to acquire the right physical, intellectual, emotional and moral foundations and shine as torch-bearers of tomorrow's society.** • **To strive to attain ever-higher benchmarks of educational excellence**	**Vision of the Department** **To create Electrical and Electronics Engineers who excel to be technically competent and fulfil the cultural and social aspirations of the society.** **Mission of the Department** • **To provide knowledge to students that builds a strong foundation in the basic principles of electrical engineering, problem solving abilities, analytical skills, soft skills and communication skills for their overall development.** • **To offer outcome based technical education.** • **To encourage faculty in training & development and to offer consultancy through research & industry interaction.**
Program Educational Objectives (PEO's) • PEO1: To produce competent and ethical Electrical and Electronics Engineers who will exhibit the necessary technical and managerial skills to perform their duties in society. • PEO2: To make graduates continuously acquire and enhance their technical and socio-economic skills. • PEO3: To aspire graduates on R&D activities leading to offering solutions and excel in various career paths. • PEO4: To produce quality engineers who have the capability to work in teams and contribute to real time projects.	**Program Specific Outcomes (PSO's)** • **PSO1: Apply the concepts of Electrical & Electronics Engineering to evaluate the performance of power systems and also to control industrial drives using power electronics.** • **PSO2: Demonstrate the concepts of process control for Industrial Automation, design models for environmental and social concerns and also exhibit continuous self- learning.**

Program Outcomes (PO's)

PO1: Engineering Knowledge: Apply knowledge of mathematics, natural science, computing, engineering fundamentals and an engineering specialization as specified in WK1 to WK4 respectively to develop to the solution of complex engineering problems.

PO2: Problem Analysis: Identify, formulate, review research literature and analyze complex engineering problems reaching substantiated conclusions with consideration for sustainable development. (WK1 to WK4)

PO3: Design/Development of Solutions: Design creative solutions for complex engineering problems and design/develop systems/components/processes to meet identified needs with consideration for the public health and safety, whole-life cost, net zero carbon, culture, society and environment as required. (WK5)

PO4: Conduct Investigations of Complex Problems: Conduct investigations of complex engineering problems using research-based knowledge including design of experiments, modelling, analysis & interpretation of data to provide valid conclusions. (WK8).

PO5: Engineering Tool Usage: Create, select and apply appropriate techniques, resources and modern engineering & IT tools, including prediction and modelling recognizing their limitations to solve complex engineering problems. (WK2 and WK6)

PO6: The Engineer and The World: Analyze and evaluate societal and environmental aspects while solving complex engineering problems for its impact on sustainability with reference to economy, health, safety, legal framework, culture and environment. (WK1, WK5, and WK7).

PO7: Ethics: Apply ethical principles and commit to professional ethics, human values, diversity and inclusion; adhere to national & international laws. (WK9)

PO8: Individual and Collaborative Team work: Function effectively as an individual, and as a member or leader in diverse/multi-disciplinary teams.

PO9: Communication: Communicate effectively and inclusively within the engineering community and society at large, such as being able to comprehend and write effective reports and design documentation, make effective presentations considering cultural, language, and learning differences

PO10: Project Management and Finance: Apply knowledge and understanding of engineering management principles and economic decision-making and apply these to one's own work, as a member and leader in a team, and to manage projects and in multidisciplinary environments.

PO11: Life-Long Learning: Recognize the need for, and have the preparation and ability for i) independent and life-long learning ii) adaptability to new and emerging technologies and iii) critical thinking in the broadest context of technological change. (WK8)

Module-2: Direct Current Motor Drives:

Syllabus

- Controlled Rectifier Fed dc Drives,
- Single Phase Fully Controlled Rectifier Control of dc Separately Excited Motor,
- Single Phase Half Controlled Rectifier Control of dc Separately Excited Motor,
- Three Phase Fully Controlled Rectifier Control of dc Separately Excited Motor,
- Three Phase Half Controlled Rectifier Control of dc Separately Excited Motor,
- Multiquadrant Operation of dc Separately Excited Motor Fed Form Fully Controlled Rectifier,
- Rectifier Control of dc Series Motor,
- Supply Harmonics,
- Power Factor and Ripple in Motor Current,
- Chopper Control of Separately Excited dc Motor,
- Chopper Control of Series Motor

Controlled Rectifier Fed DC Drives

- Controlled Rectifier Fed DC Drives are used to get variable dc voltage from an ac source of fixed voltage.
- Controlled Rectifier Fed DC Drives are also known as Static Ward-Leonard drives.

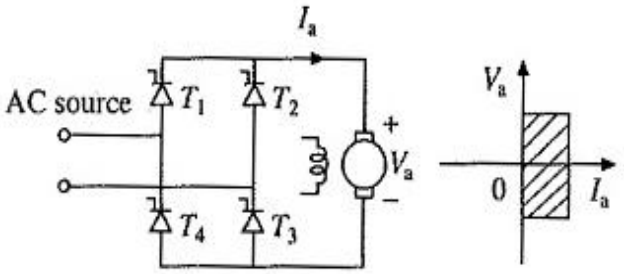

(a) Single-phase fully-controlled rectifier

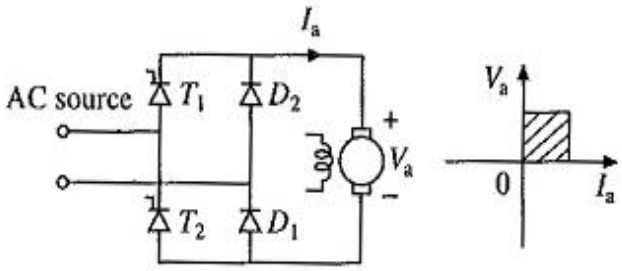

(b) Single-phase half-controlled rectifier

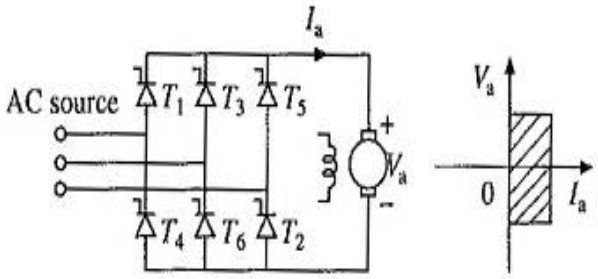

(c) Three-phase fully-controlled rectifier

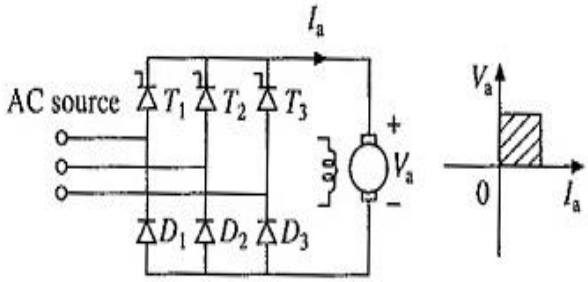

(d) Three-phase half-controlled rectifier

Prepared by KAVYASHREE S, Asst Professor, Dept of EEE

Figure shows commonly used Controlled Rectifier Fed DC Drives and quadrants in which they can operate on V_a-I_a plane.

As thyristors are capable of conducting current only in one direction, all these rectifiers are capable of providing current only in one direction.

Rectifiers of Figs.(a) and (c) provide control of dc voltage in either direction and therefore, allow motor control in quadrants I and IV. They are known as **Fully Controlled Rectifiers.**

Rectifiers of Figs.(b) and (d) as they allow dc voltage control only in one direction and motor control in quadrant I only. They are called **Half Controlled Rectifiers**

For low power applications (up to around 10 kW) single-phase rectifier drives are employed. For high power applications, three-phase rectifier drives are used. Exception is made in traction where single phase drives are employed for large power ratings.

1. Single Phase Fully Controlled Rectifier Control of DC Motor

The Single Phase Fully Controlled Rectifier Control of DC Motor is shown in Fig. (a).

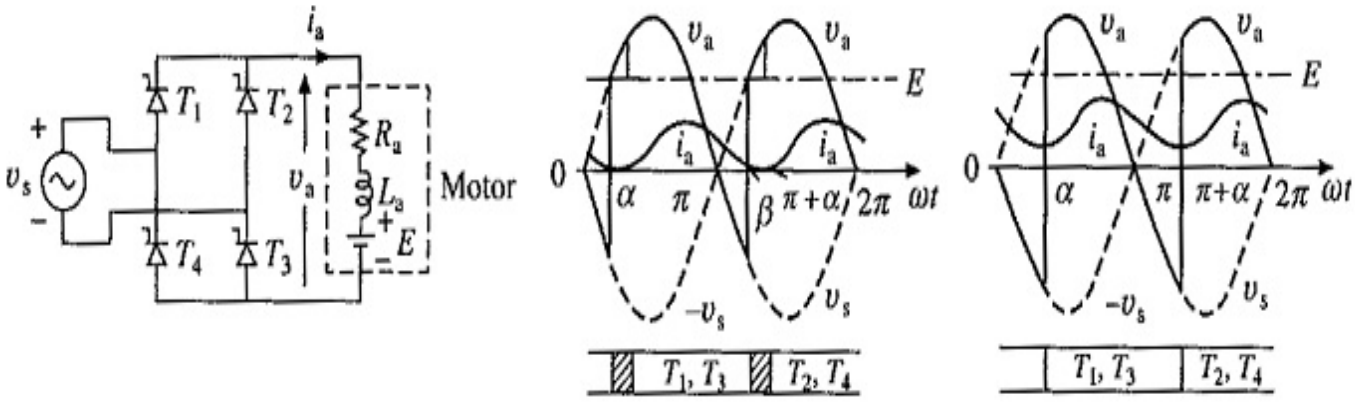

(a) Drive circuit (b) Discontinuous conduction waveforms (c) Continuous conduction waveforms

- Motor is shown by its equivalent circuit.
- Field supply is not shown.
- When field control is required, field is fed from a controlled rectifier, otherwise from an uncontrolled rectifier.
- The ac input voltage is defined by $v_s = V_m \sin \omega t$
- In a cycle of source voltage, thyristors T_1 and T_3 are given gate signals from α to π, and thyristors T_2 and T_4 are given gate signals from (π + α) to 2π.
- When armature current does not flow continuously, the motor is said to operate in discontinuous conduction.
- When current flows continuously, the conduction is said to be continuous.

- The drive under consideration, predominantly operates in discontinuous conduction.
- Discontinuous conduction has several modes of operation.

Discontinuous conduction mode :

- In discontinuous conduction mode of Single Phase Fully Controlled Rectifier Control of DC Motor, current starts flowing with the **turn-on** of thyristors **T_1 and T_3 at ωt = α.**
- Motor gets connected to the source and its terminal voltage equals Vs.
- The current, which flows against both, E and the source voltage after ωt = π, falls to zero at β.
- Due to the absence of current, T_1 and T_3 turn-off. Motor terminal voltage is now equal to its induced voltage E.
- When thyristors T_2 and T_4 are fired at (π + α), next cycle of the motor terminal voltage Va starts.

In a Single Phase Fully Controlled Rectifier Control of DC Motor terminal voltage Va, the drive operates in two intervals

i. Duty interval (α ≤ ωt ≤ β) when motor is connected to the source and Va = Vs.

ii. Zero current interval (β ≤ ωt ≤ π + α) when $i_a = 0$ and Va = E.

Drive operation is described by the following equations

$$v_a = R_a i_a + L_a \frac{di_a}{dt} + E = V_m \sin \omega t, \text{ for } \alpha \le \omega t \le \beta$$

$$v_a = E \quad \text{and} \quad i_a = 0 \quad \text{for} \quad \beta \le \omega t \le \pi + \alpha \qquad (1)$$

Simplifying eqn (1)

$$i_a(\omega t) = \frac{V_m}{Z} \sin(\omega t - \phi) - \frac{E}{R_a} + K_1 e^{-t/\tau_a} \quad \text{for } \alpha \le \omega t \le \beta$$

$$Z = \sqrt{R_a^2 + (\omega L_a)^2}$$

$$\phi = \tan^{-1}(\omega L_a / R_a)$$

$$i_a(\omega t) = \frac{V_m}{Z}[\sin(\omega t - \phi) - \sin(\alpha - \phi) e^{-(\omega t - \alpha)\cot\phi}]$$

$$- \frac{E}{R_a}[1 - e^{-(\omega t - \alpha)\cot\phi}], \quad \text{for } \alpha \le \omega t \le \beta$$

As $i_a(\beta)=0$ $$\frac{V_m}{Z} \sin(\beta - \phi) - \frac{E}{R_a} + \left[\frac{E}{R_a} - \frac{V_m}{Z} \sin(\alpha - \phi)\right] e^{-(\beta - \alpha)\cot\phi} = 0$$

Since voltage drop across the armature inductance due to dc component of armature current is zero

where $V_a = E + I_a R_a$ *V_a and I_a are respectively dc components of armature voltage and current respectively.*

Armature voltage: *From Fig (b)*

$$V_a = \frac{1}{\pi}\left[\int_{\alpha}^{\beta} V_m \sin \omega t \, d(\omega t) + \int_{\beta}^{\pi+\alpha} E d(\omega t)\right]$$

$$= \frac{V_m(\cos\alpha - \cos\beta) + (\pi + \alpha - \beta)E}{\pi}$$

- Armature current consists of dc component Ia and harmonics.
- When flux is constant, only dc component produces steady torque.
- Harmonics produce alternating torque components, the average value of which is zero. Therefore, Speed is given by

$$\omega_m = \frac{V_m(\cos\alpha - \cos\beta)}{K(\beta - \alpha)} - \frac{\pi R_a}{K^2(\beta - \alpha)} T$$

- Boundary between continuous and discontinuous conduction is reached when $\beta = \pi + \alpha$. Substituting $\beta = \pi + \alpha$ in Eq. Critical value of speed is given by,

$$\omega_{mc} = \frac{R_a V_m}{ZK} \sin(\alpha - \phi)\left[\frac{1 + e^{-\pi \cot\phi}}{e^{-\pi \cot\phi} - 1}\right]$$

Continuous conduction mode :

- In continuous conduction mode of Single Phase Fully Controlled Rectifier Control of DC Motor, a positive current flows through the motor, and T_2 and T_4 are in conduction just before α.
- Application of gate pulses turns on forward biased thyristors T_1 and T_3 at α.
- Conduction of T_1 and T_3 reverse biases T_2 and T_4 and turns them off.

- A cycle of Va is completed when T_2 and T_4 are turned-on at $(\pi + \alpha)$ causing turn-off of T_1 and T_3.

Armature voltage

$$V_a = \frac{1}{\pi}\int_{\alpha}^{\pi+\alpha} V_m \sin \omega t \, d(\omega t) = \frac{2V_m}{\pi}\cos\alpha$$

Speed

$$\omega_m = \frac{2V_m}{\pi K}\cos\alpha - \frac{R_a}{K^2}T$$

- Speed torque curves for the drive are shown in Fig.
- The ideal no load operation is obtained when Ia = 0.
- When both thyristor pairs (T_1, T_3) and (T_2, T_4) fail to fire, Ia will be zero.
- This will happen when E > Vs throughout the period for which firing pulses are present.
- Therefore, when $\alpha < \pi/2$, E should be greater or equal to Vm and when $\alpha > \pi/2$, E should be greater or equal to Vm sin ωt.
- Therefore, no load speeds are given by

$$\omega_{m0} = \frac{V_m}{K}, \quad \text{for } 0 \le \alpha \le \pi/2$$

$$= \frac{V_m \sin\alpha}{K}, \quad \text{for } \pi/2 \le \alpha \le \pi$$

- Maximum average terminal voltage ($2V_m/\pi$) is chosen equal to the rated motor voltage.
- Ideal no load speed of the motor when fed by a perfect direct voltage of rated value will then be ($2V_m/\pi K$).
- It is interesting is note that the maximum no load speed with rectifier control is ($\pi/2$) times this value.
- Boundary between continuous and discontinuous conduction is shown by dotted line.
- For torques less than rated, a low power drive mainly operates in discontinuous conduction.

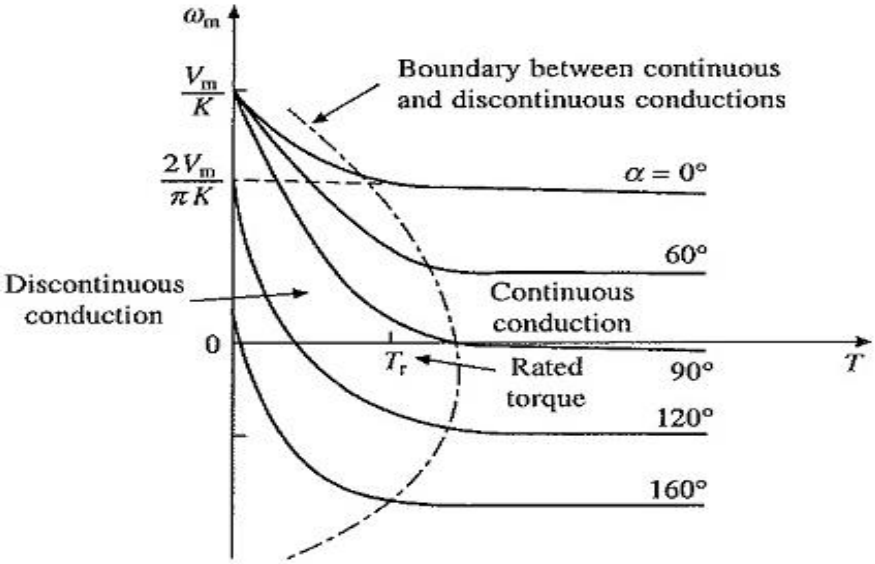

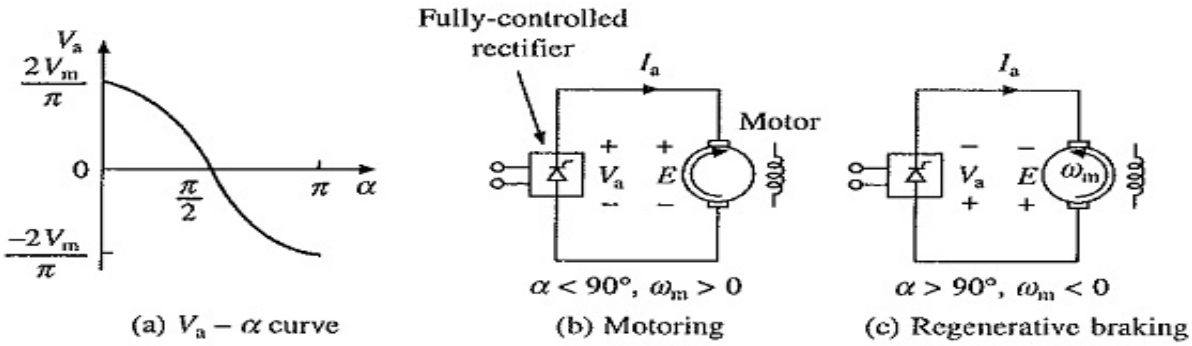

- Two quadrant operation capability of the drive can be utilized only with overhauling loads or other active loads which can drive the motor in reverse direction.
- In a normal two quadrant operation of a motor one needs forward motoring (quadrant I) and forward braking (quadrant II) which cannot be provided by the drive.

2. Single Phase Half Controlled Rectifier Control of DC Separately Excited Motor

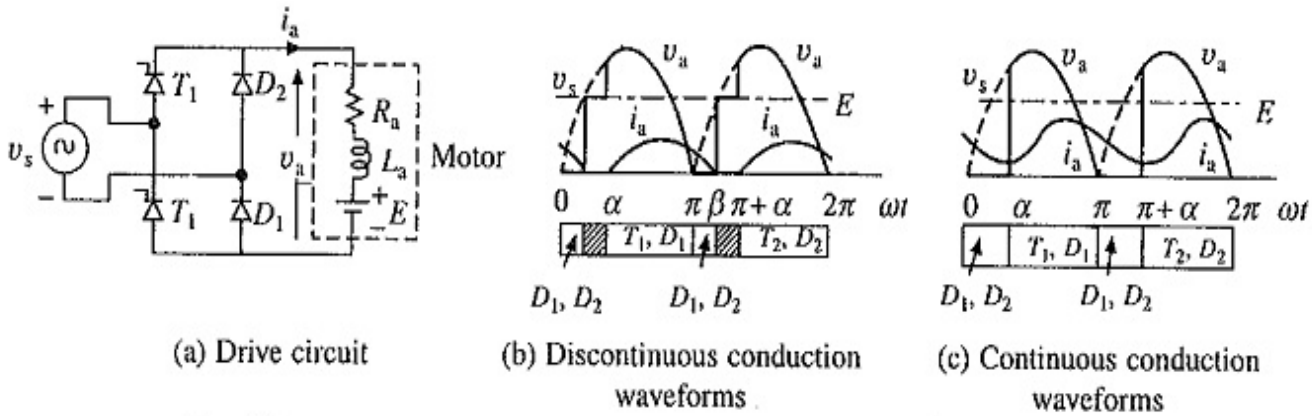

- Single Phase Half Controlled Rectifier Control is shown in Fig.
- T1 receives gate pulse from α to π and T2 from (π+ α) to 2π. Motor terminal voltage and current waveforms for the dominant discontinuous and continuous conduction mode are shown above.
- In **discontinuous conduction mode**, when T1 is fired at α, motor gets connected to the source through T1 and D1 and Va = Vs.
- The armature current flows and D2 gets forward biased at π.
- Consequently, armature current freewheels through the path formed by D1 and D2, and the motor terminal voltage is zero.
- Conduction of D2 reverse biases T1 and turns it off.
- Armature current drops to 0 at β and stays zero until T2 is fired at (π+ α). Similarly, the continuous conduction mode can be explained.

Discontinuous Conduction

i. Duty interval (α ≤ ωt ≤ π): Substitution of ωt = π in Armature current equation gives $i_a(\pi)$.

ii. Freewheeling interval (π ≤ ωt ≤ β): Operation is governed by the following equation:

$$i_a R_a + L_a \frac{di_a}{dt} + E = 0$$

$$i_a(\omega t) = \frac{V_m}{Z}[\sin\phi \cdot e^{-(\omega t-\pi)\cot\phi} - \sin(\alpha-\phi)\cdot e^{-(\omega t-\alpha)\cot\phi}]$$

$$-\frac{E}{R_a}[1 - e^{-(\omega t-\alpha)\cot\phi}], \quad \text{for } \pi \le \omega t \le \beta$$

iii. Zero current interval (β ≤ ωt ≤ π + α): Equation (5.73) is applicable. Since ia(β) = 0, one gets from

$$e^{\beta\cot\phi} = \frac{R_a V_m}{ZE}[\sin\phi\, e^{\pi\cot\phi} - \sin(\alpha-\phi)e^{\alpha\cot\phi}] + e^{\alpha\cot\phi}$$

$$V_a = \frac{1}{\pi}\left[\int_\alpha^\pi V_m \sin\omega t\, d(\omega t) + \int_\beta^{\pi+\alpha} E d(\omega t)\right]$$

$$= \frac{V_m(1+\cos\alpha) + (\pi+\alpha-\beta)E}{\pi}$$

$$\omega_m = \frac{V_m(1+\cos\alpha)}{K(\beta-\alpha)} - \frac{\pi R_a}{K^2(\beta-\alpha)}T$$

Continuous Conduction

$$V_a = \frac{1}{\pi}\int_{\alpha}^{\pi} V_m \sin \omega t \, d(\omega t) = \frac{V_m}{\pi}(1 + \cos \alpha)$$

$$\omega_m = \frac{V_m}{\pi K}(1 + \cos \alpha) - \frac{R_a}{K^2} T$$

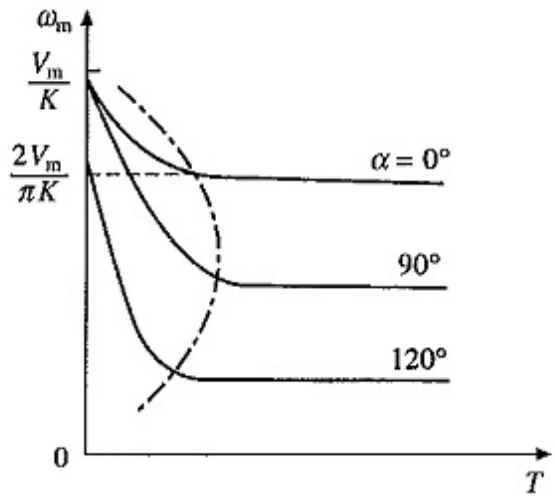

- The output voltage cannot be reversed.
- When coupled to an active load, in the motor speed can reverse, reversing E as shown in Fig. (b).
- As current direction does not change, machine now works as a generator producing braking torque.
- Since, rectifier voltage cannot reverse, generated energy cannot be transferred to ac source, and therefore, it is absorbed in the armature circuit resistance.
  - Braking so obtained is nothing but the reverse voltage braking (plugging).
  - Such a braking is not only inefficient, but also causes a large current [Ia = (Va + E)/Ra] to flow through the rectifier and motor.
  - Since it cannot be regulated by adjustment of firing angle, it will damage the rectifier and motor.
  - Therefore, when load is active, care should be taken to avoid such a operation. If such a operation cannot be avoided, fully-controlled rectifier should be used.
- A Single Phase Half Controlled Rectifier Control is cheaper and gives higher power factor compared to single-phase fully-controlled rectifier. But then it only provides control in quadrant I.

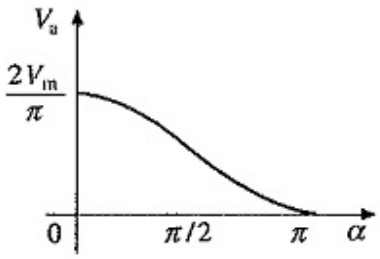

(a) $V_a - \alpha$ curve

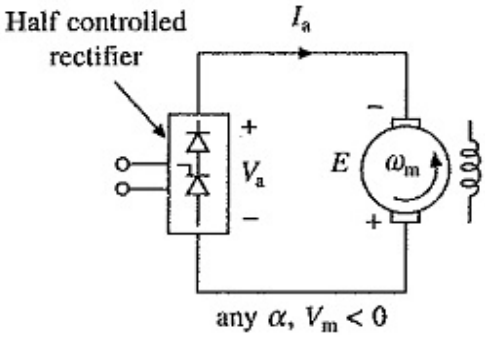

(b) Braking operation

3. Three phase Fully Controlled Rectifier Control of DC Separately Excited Motor

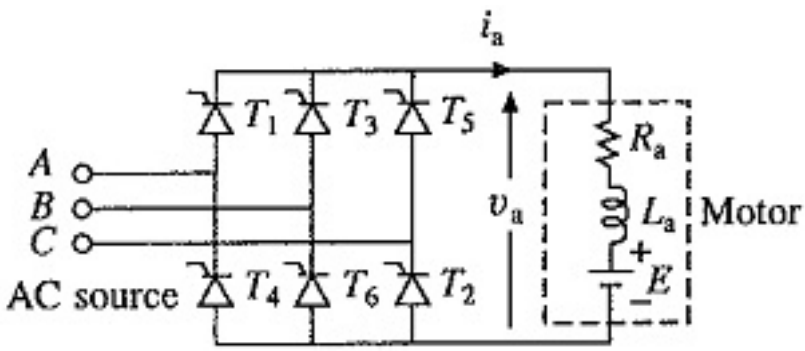

(a) Drive circuit

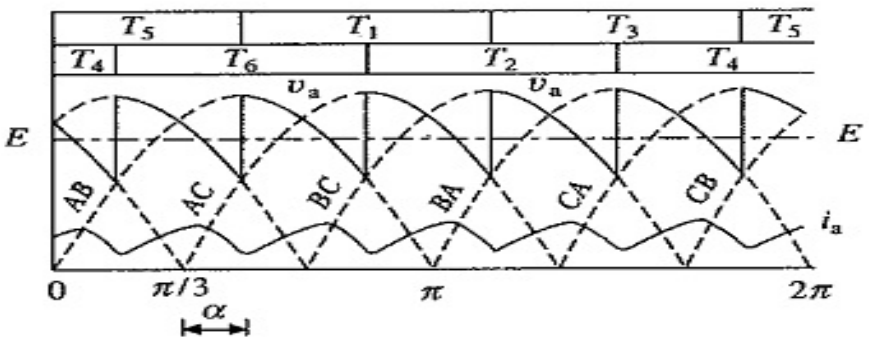

(b) Motoring operation, $\alpha = 30°$

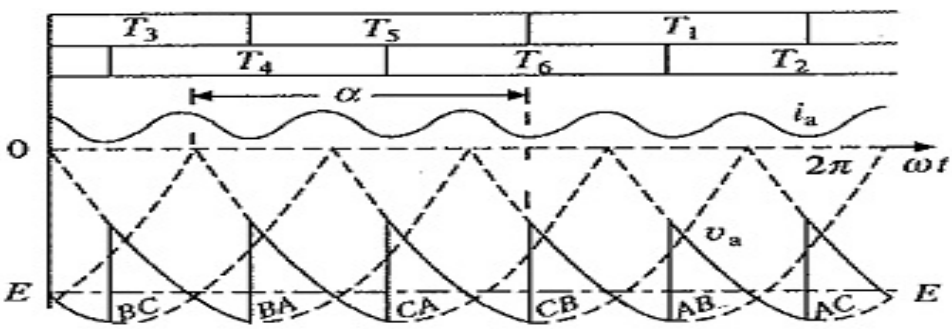

(c) Braking operation $\alpha \simeq 140°$

- Three phase Fully Controlled Rectifier Control (6 pulse) fed separately excited dc motor drive is shown in Fig. (a).
- Thyristors are fired in the sequence of their numbers with a phase difference of 60° by gate pulses of 120°duration.
- Each thyristor conducts for 120, and two thyristors conduct at a time—one from upper group (odd numbered thyristors) and the other from lower group (even numbered thyristors) applying respective line voltage to the motor.

60° A Phase: A- T1 - M – T6 – B

A- T1 – M- T2- C

60° B Phase: B- T3 - M – T2 – C

B- T3 – M- T4- A

60° C Phase: C- T5 - M – T4 – A

C- T5 – M- T6- B

- Transfer of current from an outgoing to incoming thyristor can take place when the respective line voltage is of such a polarity that not only if forward biases the incoming thyristor, but also leads to the reverse biasing of the outgoing when incoming turns-on.
- Thus, firing angle for a thyristor is measured from the instant when the respective line voltage is zero and increasing.
- For example, the transfer of current from thyristor T_5 to thyristor T_1 can occur as long as the line voltage v_{AC} is positive.
- Hence, for thyristor T_1, firing angle α is measured from the instant $V_{AC} = 0$ and increases.
- If line voltage V_{AB} is taken as the reference voltage, then.

$$v_{AB} = V_m \sin \omega t$$
$$\alpha = \omega t - \pi/3$$

- Motor terminal voltage and current waveforms for continuous conduction are shown in Figs. (b) and (c) for motoring and braking operations, respectively.
- Devices under conduction are also shown in the figure.
- The discontinuous conduction is neglected here because it occurs is a narrow region of its operation.
- For the motor terminal voltage cycle from **π/3 +α** to **2π/3+ α** (from Figs. (b) and (c)).

$$V_a = \frac{3}{\pi} \int_{\alpha+\pi/3}^{\alpha+2\pi/3} V_m \sin \omega t \, d(\omega t)$$
$$= \frac{3}{\pi} V_m \cos \alpha$$

$$\omega_m = \frac{3V_m}{\pi K} \cos \alpha - \frac{R_a}{K^2} T$$

- When discontinuous conduction is ignored, speed-torque curves of Fig. are obtained.
- The V_a vs α curve has same nature as shown in Fig. (a) for single-phase case.
- Consequently, drive operates in quadrants I and IV.

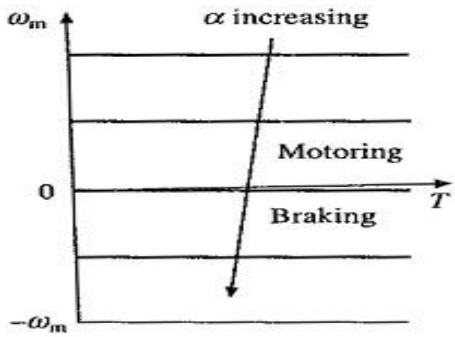

4. Three Phase Half Controlled Rectifier Control of DC Separately Excited Motor

- For rectifier circuit, shown in Fig. (d), under continuous conduction

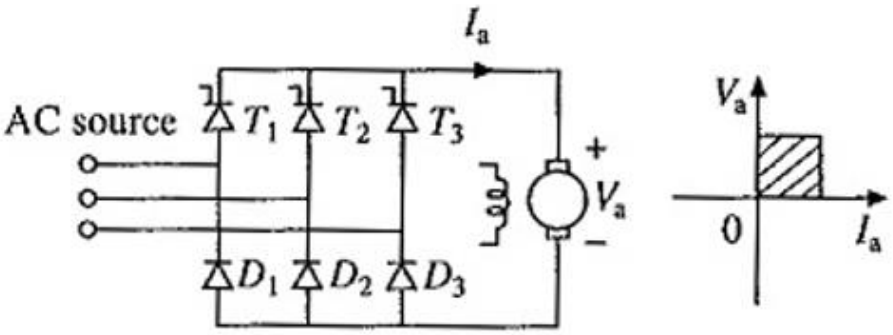

(d) Three-phase half-controlled rectifier

$$V_a = \frac{3V_m}{2\pi}(1 + \cos\alpha)$$

$$\omega_m = \frac{3V_m}{2\pi K}(1 + \cos\alpha) - \frac{R_a}{K^2}T$$

Va vs α curve has same nature as shown in Fig.(a). Consequently, drive operates only in quadrant I.

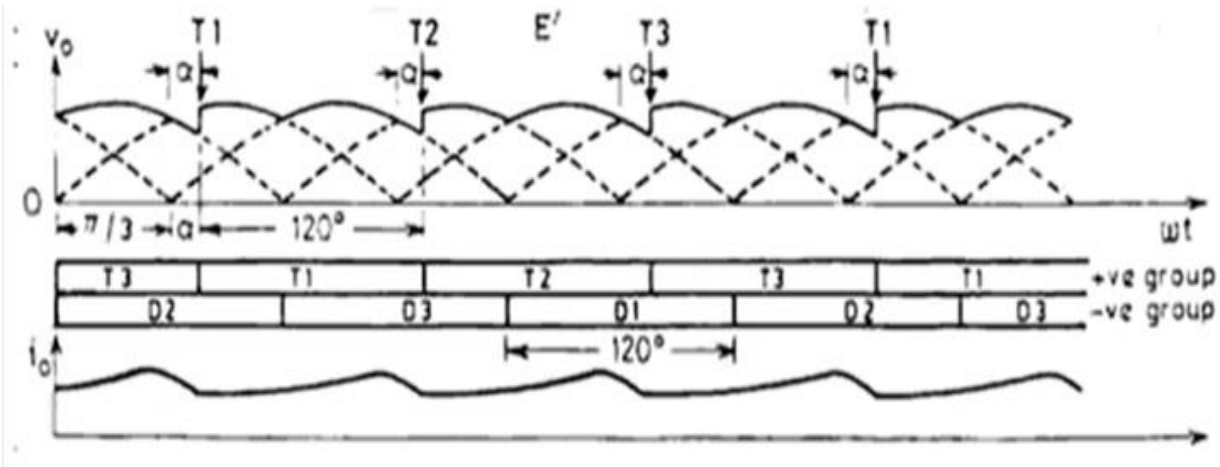

5. Multi-quadrant Operation of dc Separately Excited Motor Fed From Fully Controlled Rectifier

1. DC Motor Reversing Switch Diagram
2. Dual Converter Control of DC Separately Excited Motor
3. Four Quadrant Drive With Field Reversal

1. DC Motor Reversing Switch Diagram

a) DC Motor Reversing Switch Diagram is shown in Fig. (a).

- A fully-controlled rectifier feeds the motor through a reversing switch RS, a mechanical reversing switch, which is used to reverse the armature connection with respect to the rectifier.
- A fully-controlled rectifier: ia flows from A1 to A2 - capable of providing operation in quadrants I (Forward Motoring) and IV (Reverse Regenerative Braking).
- The reversal of the armature connection: i_a flows from A2 to A1 provides operation in quadrant III (Reverse Motoring) and II (Forward Regenerative Braking).

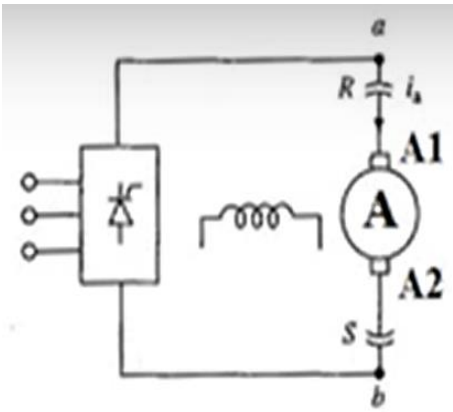

Fig. (a): DC Motor Reversing Switch Diagram.

b) DC Motor Reversing Switch with relay-operated contactor

The DC Motor Reversing Switch Diagram consisting a relay-operated contactor with two contacts- normally open and two normally closed as shown in Fig. (b).

- F contactor Closed- ia flows from A1 to A2, operating in Quadrants I and IV.
- R contactor Closed- ia flows from A2 to A1, operating in Quadrants III and II.

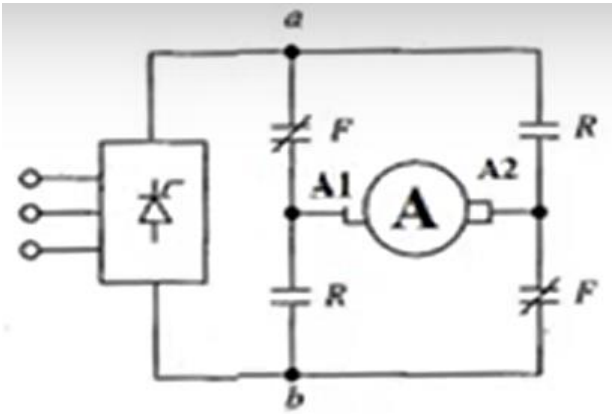

b) DC Motor Reversing Switch with relay-operated contactor

c) DC Motor Reversing Switch with Thyristor

When slow operation and frequent maintenance associated with the contactor is not acceptable, reversing switch is realized using four thyristors as shown in Fig. (c).

- With thyristor pair T_F closed: i_a flows from A1 to A2, operating in Quadrants I and IV.
- With thyristor pair T_R closed: i_a flows from A2 to A1, operating in Quadrants III and II.

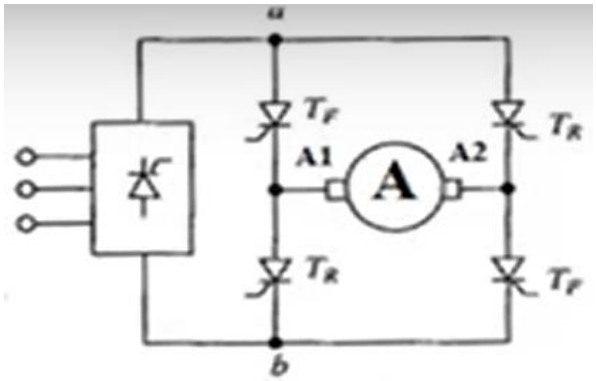

c) DC Motor Reversing Switch with Thyristor

2. Dual Converter Control of DC Separately Excited Motor

- Dual Converter Control of DC Separately Excited Motor consists of two fully-controlled rectifiers connected in anti-parallel across the armature.
- For power ratings upto around 10 kW, single-phase fully-controlled rectifiers can be used.
- For higher ratings, three-phase fully controlled rectifiers are employed.
- **Rectifier A**, which provides positive motor current and voltage in either direction, allows motor control in quadrants I and IV
- **Rectifier B** provides motor control in quadrants III and II, because it gives negative motor current and voltage in either direction

There are two methods of control for the Dual Converter Control of DC Separately Excited Motor:

(a) In **simultaneous control** both the rectifiers are controlled together. In order to avoid dc circulating current between rectifiers, they are operated to produce same dc voltage across the motor terminals.

(b) In **non-simultaneous** or non-circulating current control method, one rectifier is controlled at a time.

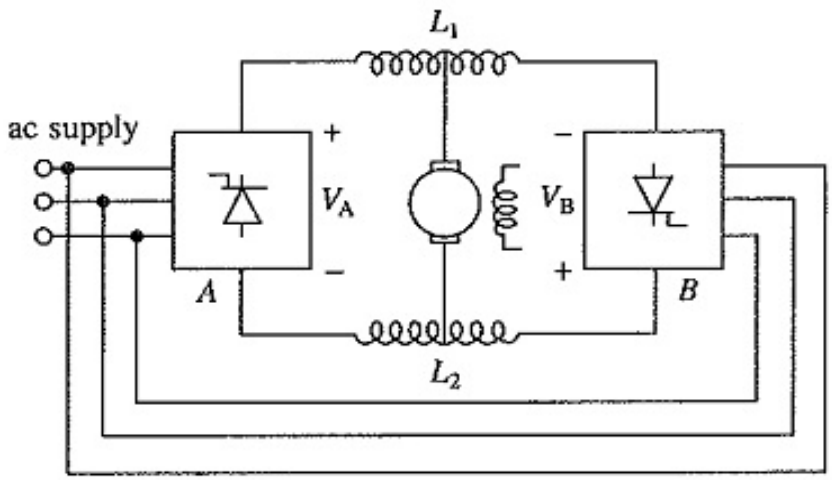

a. Simultaneous control

- Both the rectifiers are controlled together
- Although, control of firing angle according to relation prevents dc circulating current, ac current does circulate due to difference between instantaneous output voltages of the two rectifiers. Inductors L_1 and L_2 are added to reduce ac circulating current.
- Because of the flow of ac circulating current, simultaneous control is also known as circulating current control. In a three-phase dual converter, inductors are chosen to allow a circulating current of 30% of full load current.

Rectifier A: Va=$\frac{3Vm}{\pi}\ cos\alpha_A$ =VA

Rectifier B: Va=$\frac{3Vm}{\pi}\ cos\alpha_B$ =VB

$$V_A + V_B = 0$$

$$\frac{3Vm}{\pi}\ cos\alpha_A + \frac{3Vm}{\pi}\ cos\alpha_B = 0$$

$$\cos\alpha_A + \cos\alpha_B = 0$$

$$\alpha_A + \alpha_B = 180°$$

- This completely eliminates discontinuous conduction, and therefore, gives good speed regulation in the complete range of the drive.

2. Dual Converter Control of DC Separately Excited Motor

In Quadrant-I

A- Rectifier Mode : ($0 < \alpha_A < 90°$)

B- Inverter Mode: ($90° < \alpha_B < 180°$)

The speed reversal is done as follows

- For speed reversal α_A is increased and α_B is decreased to satisfy the eqn. $\alpha_A + \alpha_B = 180°$
- The motor back emf exceeds magnitudes of V_A and V_B.
- The armature current shifts to rectifier B and the motor operate in quadrant II.
- The current control loop adjusts the firing angle α_B continuously so as to brake the motor at the maximum allowable current from initial speed to zero speed and then accelerates to the desired speed in the reverse direction.

b. Non-simultaneous or non-circulating current control method

- One rectifier is controlled at a time.
- When operating in quadrant I, rectifier A will be supplying the motor and rectifier B will not be operating.
- The firing angle of rectifier A is set at the highest value- the rectifier works as an inverter and forces the armature current to zero.

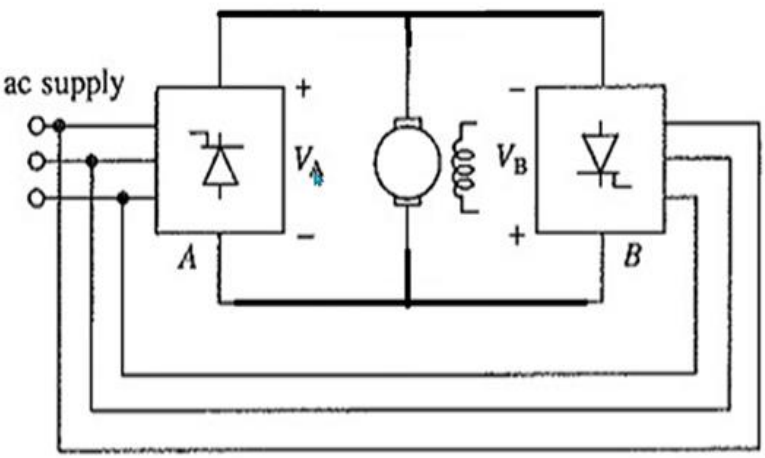

- After zero current is sensed, a dead time of 2 to 10 ms is provided to ensure the turn-off of all thyristors of rectifier A.
- Now firing pulses are withdrawn from rectifier A and transferred to rectifier B.
- The firing angle rectifier B i,e αB is set initially at the highest value.
- Now onwards the current control loop adjust the firing angle αB continuously so as to brake the motor at the maximum allowable current from initial speed to zero speed and then accelerates to the desired speed in the reverse direction

3. Field Current Reversal

- Four Quadrant Drive With Field Reversal as shown in Fig, armature is fed from a fully-controlled rectifier and the field from a dual converter so that field current can be reversed.
- With field current in one direction *(i_f flows from F1 to F2)*, the motor operates is quadrants I and IV. When field current is reversed *(i_f flows from F2 to F1),* it operates in quadrants III and II. The dual converter operates with non-simultaneous control.

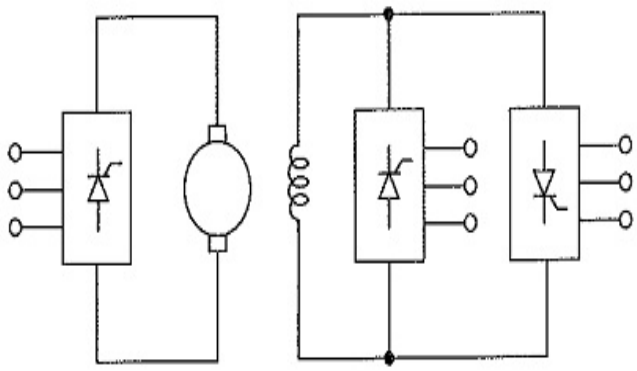

The speed reversal is done as follows:

- The armature rectifier firing angle is set at the highest value to force the armature current to zero and then firing pulses are withdrawn.
- The firing angle of the rectifier supplying the field is now set at the highest value.
- It operates as an inverter and the field current is forced to zero.
- After a suitable dead time, the second rectifier is activated at the lowest firing angle.
- When the field current has nearly settled and the motor back emf has reversed, the firing pulses of the armature rectifier are released so as to set the firing angle at the highest value.

6.Rectifier Control of DC Series Motor

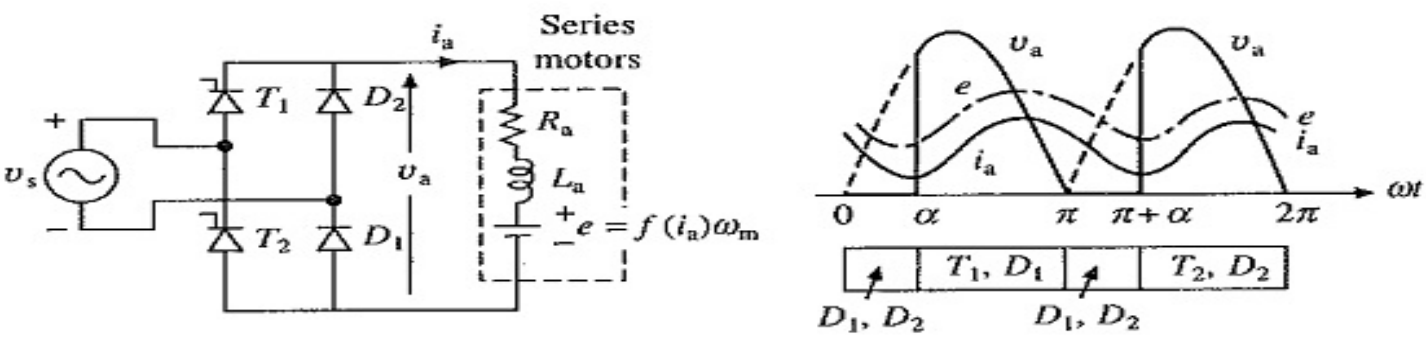

(a) Drive circuit (b) Waveforms

- Single-phase controlled Rectifier Control of DC Series Motor are employed in traction.
- A single-phase half-controlled Rectifier Control of DC Series Motor is shown in Fig. (a). Equivalent circuit of motor is also shown.
- Since back emf decreases with armature current, discontinuous conduction occurs only in a narrow range of operation.
- The waveforms of v_a , i_a and instantaneous back emf *e* for continuous conduction are shown in Fig. (b).
- Although, in steady state, fluctuations in speed are negligible, e is not constant but fluctuates with ia. For a given speed, e is related to ia through magnetization curve of motor, which is nonlinear owing to saturation.
- Motor operation is described by following equations for duty and freewheeling intervals respectively,

$$V_m \sin \omega t = R_a i_a + L_a \frac{di_a}{dt} + f(i_a)\omega_m, \quad \text{for } \alpha \le \omega t \le \pi$$

$$0 = R_a i_a + L_a \frac{di_a}{dt} + f(i_a)\omega_m, \quad \text{for } \pi \le \omega t \le (\pi + \alpha)$$

- Because of the presence of term $f(i_a)$, above eqns and are nonlinear differential equations and can only be solved numerically. A simple method of analysis is obtained when e is replaced by its average value E_a such

$$E_a = K_a \omega_m$$
$$K_a = f(I_a)$$

- Since the drop across the inductance L_a due to dc component of armature current I_a is zero

$$V_a = E_a + I_a R_a$$
$$\omega_m = \frac{V_a - I_a R_a}{K_a}$$
$$T = K_a I_a$$

- Following sequence of steps are used to calculate speed-torque characteristic for a given α taking into account non-linearly of the magnetic circuit:
- A value is chosen for Ia. Corresponding value of Ka is obtained from the magnetization characteristic of the motor.

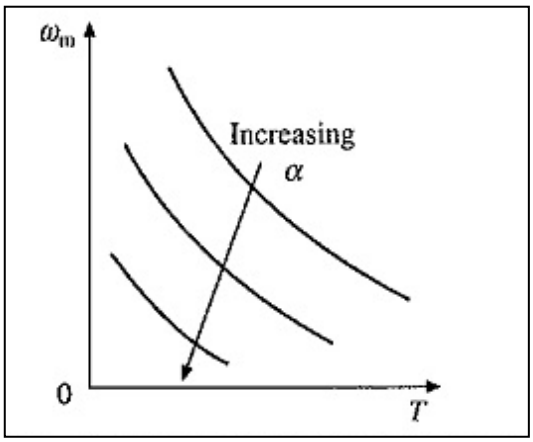

Control of Fractional hp Motors:

Employing a single thyristor, is commonly used for the control of fractional hp universal, dc series and permanent-magnet dc motors. Such drives are employed in hand tools and small domestic appliances.

Universal motors may also be controlled by a triac ac voltage controller as shown in Fig

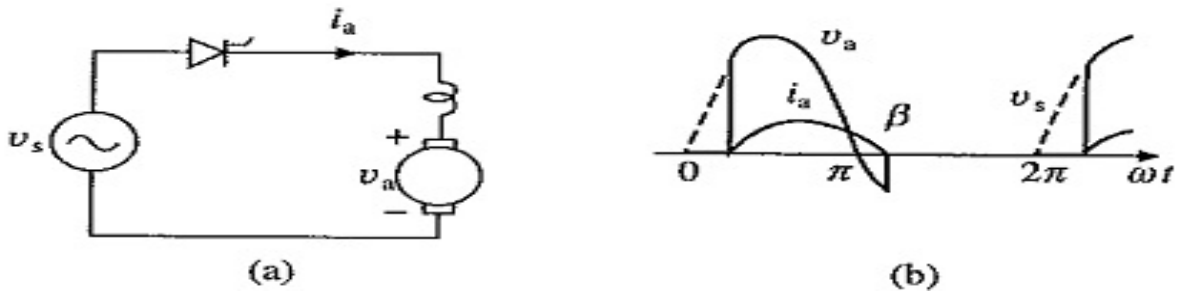

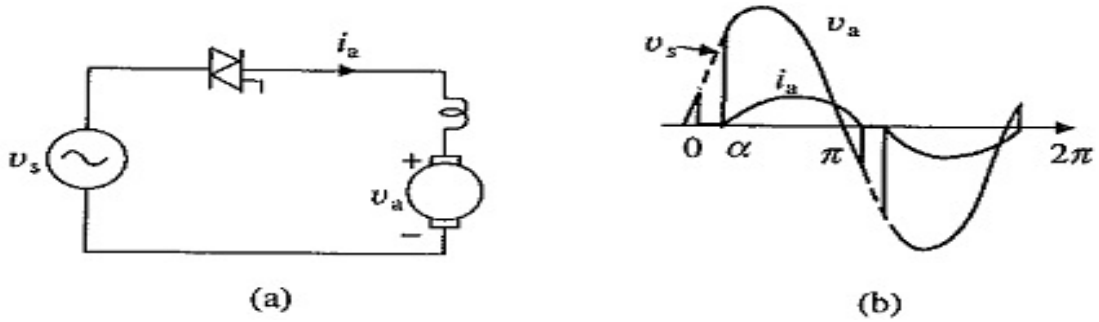

Supply harmonics, power factor and ripple in motor current

1. Distortion of Supply:

- Source current of a rectifier has harmonics. In a weak ac source, with high internal impedance, current harmonics distort source voltage.
- Source voltage and current distortions have several undesirable effects including interference with other loads connected to the source and radio frequency interference in communication equipment.

2. Low power factor

$$PF = \frac{\text{Real Power}}{\text{Apparent Power}} = \frac{VI_1 \cos\phi_1}{VI_{rms}}$$

$$PF = \frac{I_1}{I_{rms}} \cos\phi_1 = \mu \cos\phi_1$$

where
V = rms source voltage, V
I_{rms} = rms source current, A
I_1 = fundamental component of source current, A
ϕ_1 = phase difference between V and I_1, rad

3. Ripple in Motor Current

- The rectifier output voltage is not perfect dc, but consists of harmonics in addition to dc component. Therefore motor current also has harmonics in addition to dc component.

- The presence of harmonics, makes rms and peak values of motor currents higher than average value (dc component). Since flux is constant, torque is contributed only by the average value of current. The harmonics produce fluctuating torques, the average value of which is zero.
- The presence of harmonics increases both copper loss and core loss. Hence for a allowable temperature rise, the torque and power outputs have lesser values than rated values. Due to the presence of harmonics, peak value of current increases and commutation condition deteriorates. Hence, the current that the motor can commutate without sparking at the brushes has a lower dc component than the rated motor current. Thus the derating of motor occur8 due to this also. On the whole the motor output (power and torque) has to be restricted considerably below rated value in order to avoid thermal overloading and sparking at brushes.

7. Chopper Control of Separately Excited DC Motor

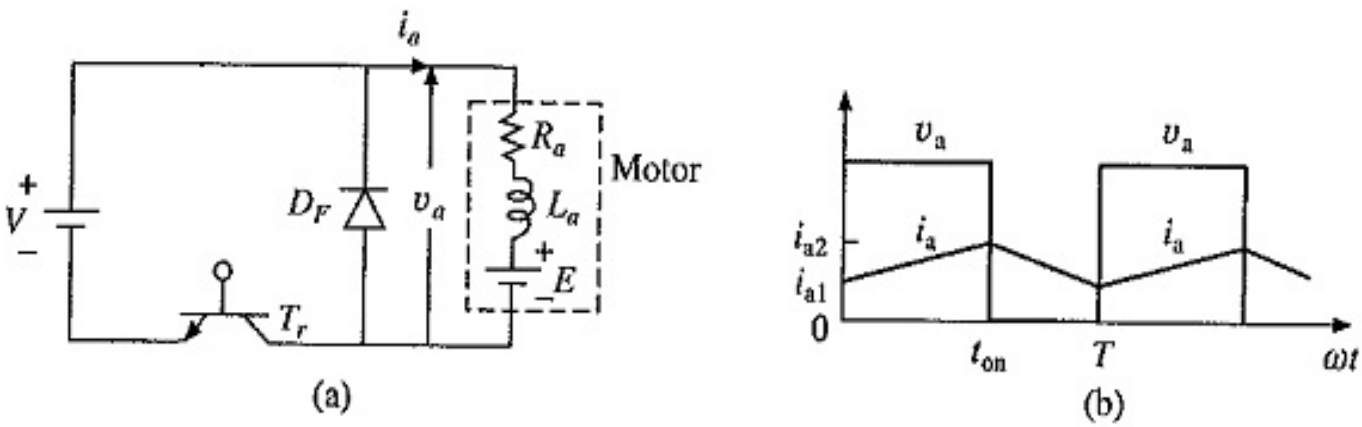

i. Motoring Control :

A transistor Chopper Control of Separately Excited DC Motor drive is shown in Fig. (a).

Transistor Tr is operated periodically with period T and remains ON for a duration t_{on}.

Present day choppers operate at a frequency which is high enough to ensure continuous conduction.

Waveforms of motor terminal voltage va and armature current ia for continuous conduction are shown in Fig. (b).

During ON-period of the transistor, $0 \le t \le t_{on}$, the motor terminal voltage is V.

The operation is described by

$$R_a i_a + L_a \frac{di_a}{dt} + E = V, \quad 0 \le t \le t_{on}$$

In this interval, armature current increases from ial to ia2. Since motor is connected to the source during this interval, it is called Duty Interval.

At t = ton, Tr is turned-off. Motor current freewheels through diode DF and motor terminal voltage is zero during interval ton ≤ t ≤ T.

Motor operation during this interval, known as freewheeling interval, is described by

$$R_a i_a + L_a \frac{di_a}{dt} + E = 0, \quad t_{on} \le t \le T$$

- Motor current decreases from i_{a2} to i_{a1} during this interval.
- Ratio of duty interval t_{on} to chopper period T is called **duty ratio or duty cycle (δ).** Thus

$$\delta = \frac{\text{Duty interval}}{T} = \frac{t_{on}}{T}$$

$$V_a = \frac{1}{T}\int_0^{t_{on}} V\,dt = \delta V$$

$$I_a = \frac{\delta V - E}{R_a}$$

$$\omega_m = \frac{\delta V}{K} - \frac{R_a}{K^2}T$$

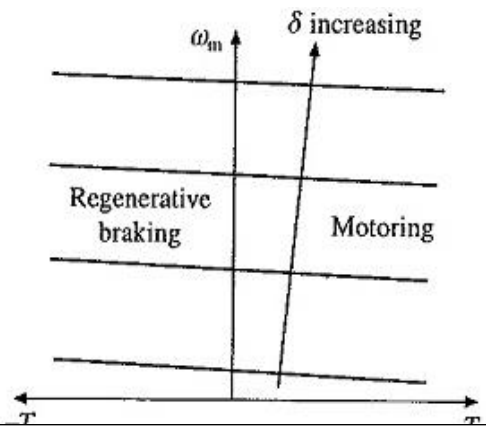

The nature of speed torque characteristic is shown in Fig

ii. Regenerative Braking:

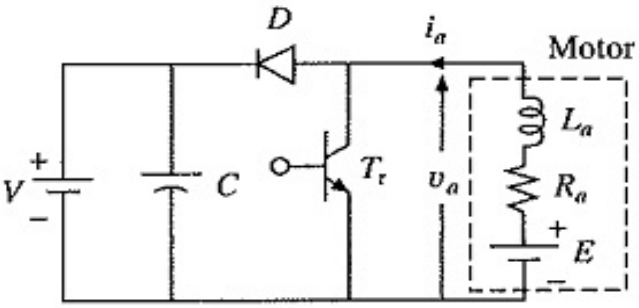

(a)

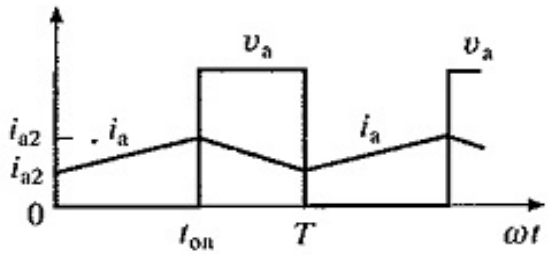

(b)

- Chopper Control of Separately Excited DC Motor for regenerative braking operation is shown in Fig. (a).
- Transistor T_r is operated periodically with a period T and ON-period of t_{on}.
- Waveforms of motor terminal voltage v_a and armature current i_a for continuous conduction.
- Usually an external inductance is added to increase the value of L_a.
- When T_r is ON, i_a increase from **i_{a1} to i_{a2}**.

- If δ is again defined as the ratio of duty interval to period T, then

$$\delta = \frac{\text{Duty interval}}{T} = \frac{T - t_{on}}{T}$$

$$V_a = \frac{1}{T}\int_{t_{on}}^{T} V\,dt = \delta V$$

$$I_a = \frac{E - \delta V}{R_a}$$

Since I_a has reversed

$$T = -KI_a$$

$$\omega_m = \frac{\delta V}{K} - \frac{R_a}{K^2}T$$

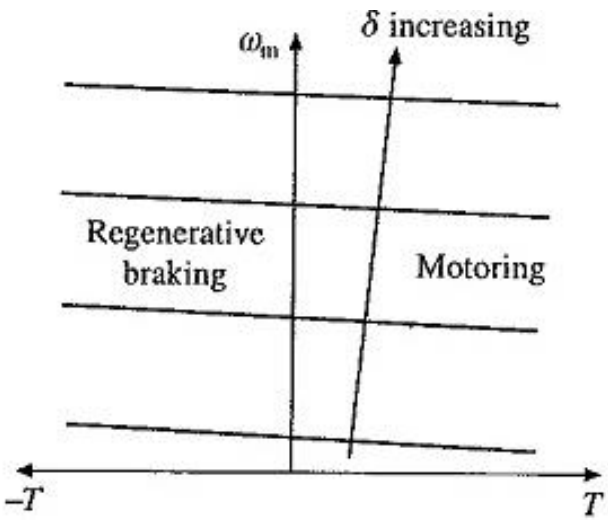

The nature of speed torque characteristic is shown in Fig

iii. Motoring and Regenerative Braking

In servo drives where fast transition from motoring to braking and vice versa is required, both Trl and Tr2 are controlled simultaneously.

In a period T, Trl is given gate drive from 0 to δT and Tr2 is given gate drive from δT to T, where δ is the duty ratio for Trl. Therefore, from **0 to δT** motor is connected to source either through Trl or D_2 depending on whether the motor current ia is positive or negative.

Since V > E, during this period the rate of change of current is always positive.

Similarly from **δT to T,** motor armature is shorted either through D_1 or Tr2 depending on whether i_a is positive or negative and during this period rate of change of current is always negative.

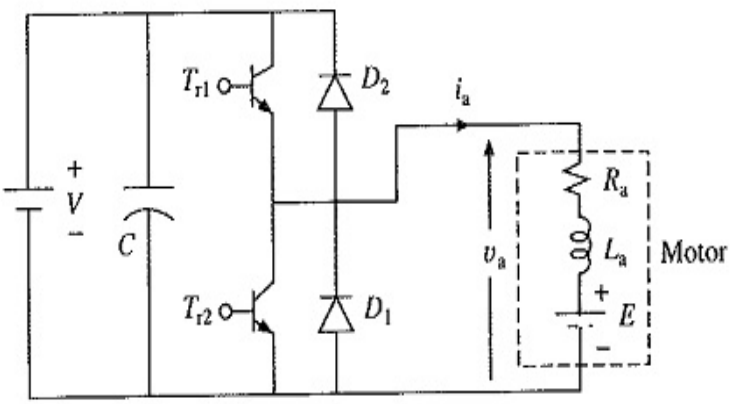

(a)

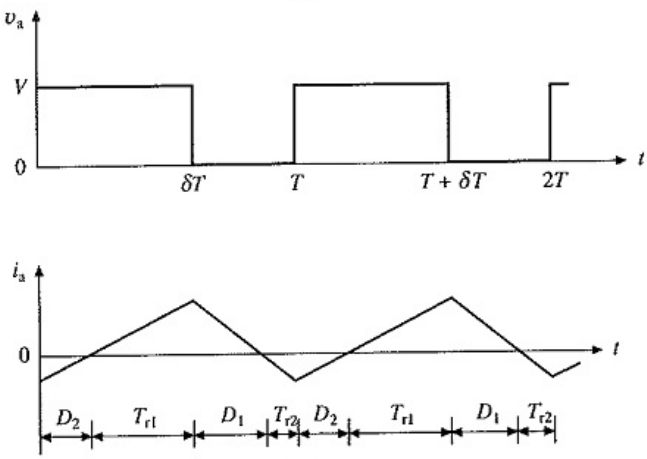

(b)

Above equation suggests that motoring operation (+ve Ia) takes place when δ > (E/V) and regenerative braking operation takes place when δ < (E/V) and transition from motoring to braking and vice versa occurs when δ = (E/V).

$$V_a = \delta V$$

$$I_a = \frac{\delta V - E}{R_a}$$

The above equations are similar to those obtained for chopper of Fig. (5.41), and therefore, given the same numbers.

Dynamic Braking:

Dynamic braking circuit and its waveforms are shown in Fig.

During the interval $0 \le t \le t_{on}$, i_a increases from i_{a1} to i_{a2}. A part of generated energy is stored in inductance and rest is dissipated in R_a and T_r. During interval $t_{on} \le t \le T$, i_a decreases from i_{a2} to i_{a2}

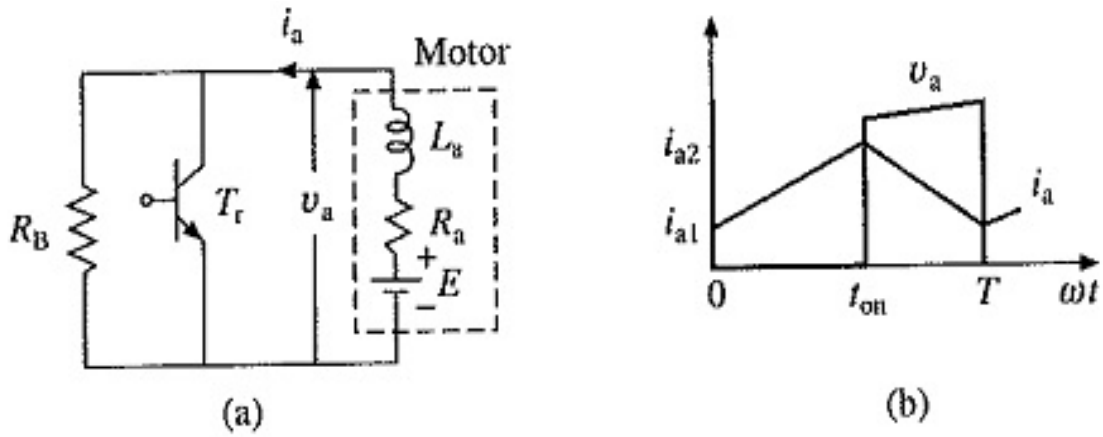

The energies generated and stored in inductance are dissipated in braking resistance RB, Ra.

Transistor Tr controls the magnitude of energy dissipated in RB, and therefore, controls its effective value.

If ia is assumed to be rippleless dc, then energy consumed E_N by RB during a cycle of chopper operation is

$$E_N = I_a^2 R_B (T - t_{on}) \qquad P = \frac{E_N}{T} = I_a^2 R_B (1 - \delta) \qquad R_{BE} = \frac{P}{I_a^2} = R_B (1 - \delta) \qquad \delta = \frac{t_{on}}{T}$$

Chopper Control of Series Motor:

Motoring : Chopper Control of Series Motor and va and ia waveforms will be same as shown in Fig. Va is given by Eq.

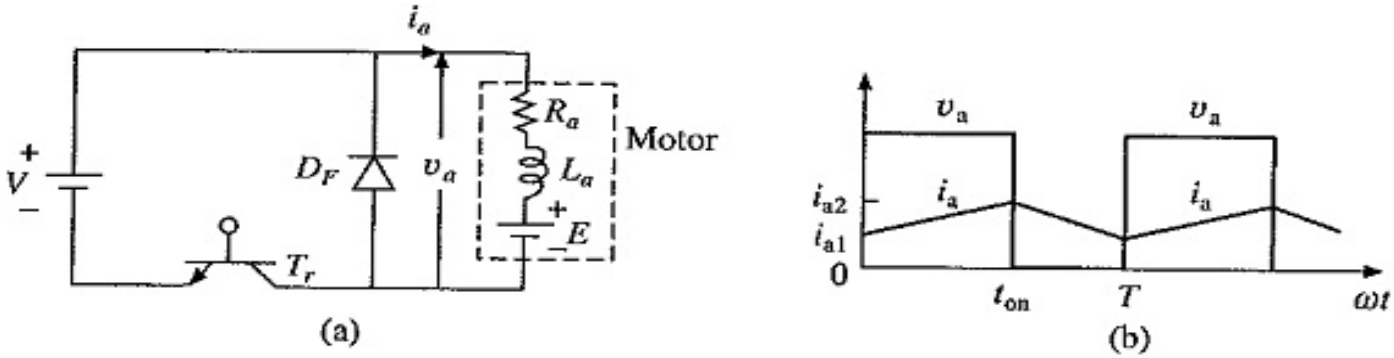

$$V_a = \frac{1}{T}\int_0^{t_{on}} V\,dt = \delta V$$

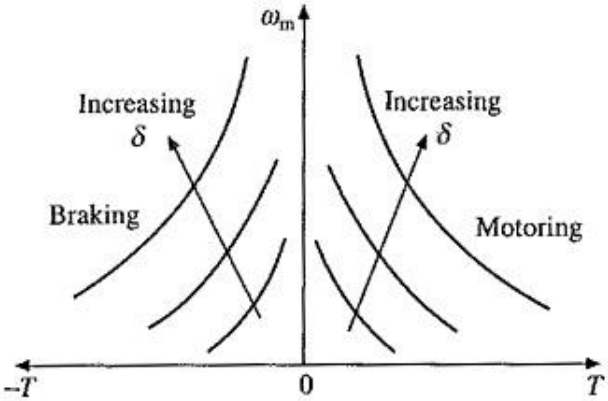

- However, e is not constant but varies with ia. Due to saturation of magnetic circuit, relationship between e and ia is non-linear.
- The approximation is already described and is applicable here.
- Consequently, motor performance can be calculated. The nature of speed torque curves is shown in Fig.

Regenerative braking:

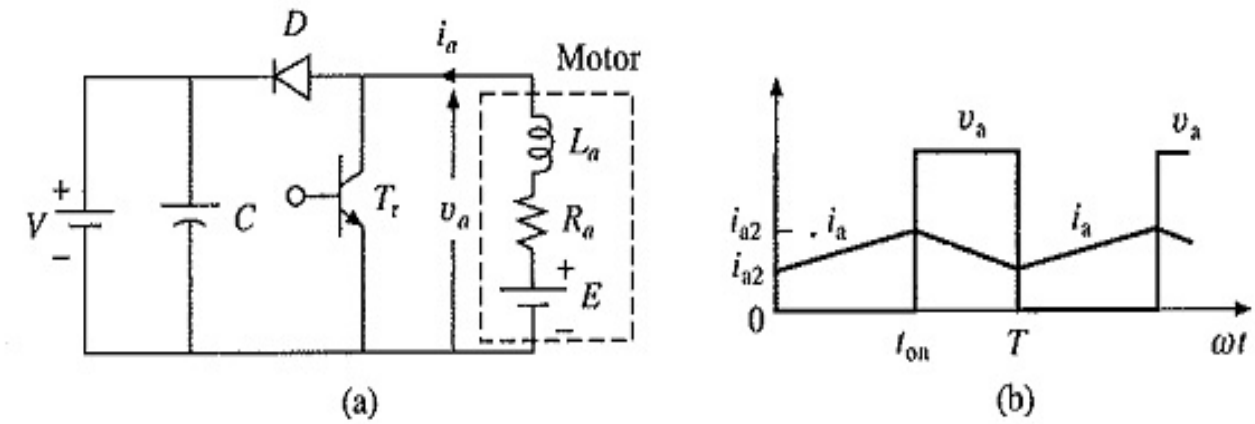

- With Chopper Control of Series Motor, regenerative braking of series motor can also be obtained. Power circuit of Fig.(a) is employed.
- During regenerative braking, series motor functions as a self-excited series generator. For self-excitation, current flowing through field winding should assist residual magnetism.
- Therefore, when changing from motoring to braking connection, while direction of armature current should reverse, field current should flow in the same direction.
- This is achieved by reversing the field with respect to armature when changing from motoring to braking operation. Waveforms of va and ia will be same as those of Fig.(b).
- For a chosen value of I_a, K_a is obtained from magnetization characteristic. Then T and ω_m are obtained from Eqs., respectively.
- The nature of speed-torque characteristics is shown in Fig.. Such characteristics give unstable operation with most loads. Consequently, regenerative braking of the series motor is difficult.

$$\omega_m = \frac{\delta V + I_a R_a}{K_a}$$

$$T = -K_a I_a$$